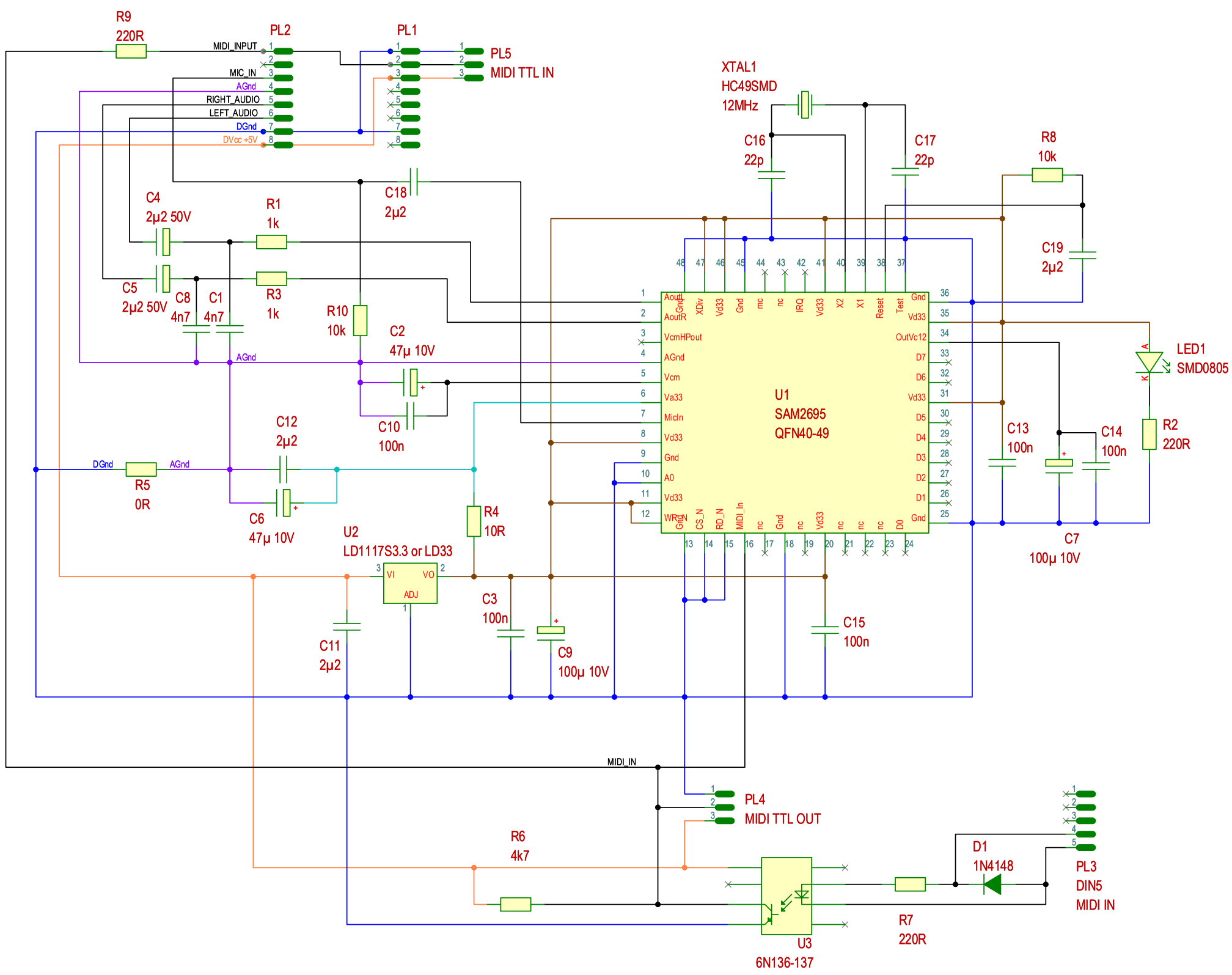
R9
220R
PL2
PL1
PL5
MIDI TTL IN
MIDI_INPUT
MIC_IN
AGnd
RIGHT_AUDIO
LEFT_AUDIO
DGnd
DVcc +5V
XTAL1
HC49SMD
12MHz
C16
22p
C17
22p
R8
10k
C18
2µ2
C4
2µ2 50V
R1
1k
C5
2µ2 50V
C8
4n7
C1
4n7
R3
1k
R10
10k
C2
47µ 10V
C10
100n
C19
2µ2
U1
SAM2695
QFN40-49
LED1
SMD0805
R2
220R
C13
100n
C14
100n
C7
100µ 10V
C12
2µ2
R5
0R
C6
47µ 10V
R4
10R
U2
LD1117S3.3 or LD33
VI
VO
ADJ
C3
100n
C9
100µ 10V
C15
100n
C11
2µ2
MIDI_IN
PL4
MIDI TTL OUT
R6
4k7
D1
1N4148
PL3
DIN5
MIDI IN
R7
220R
U3
6N136-137