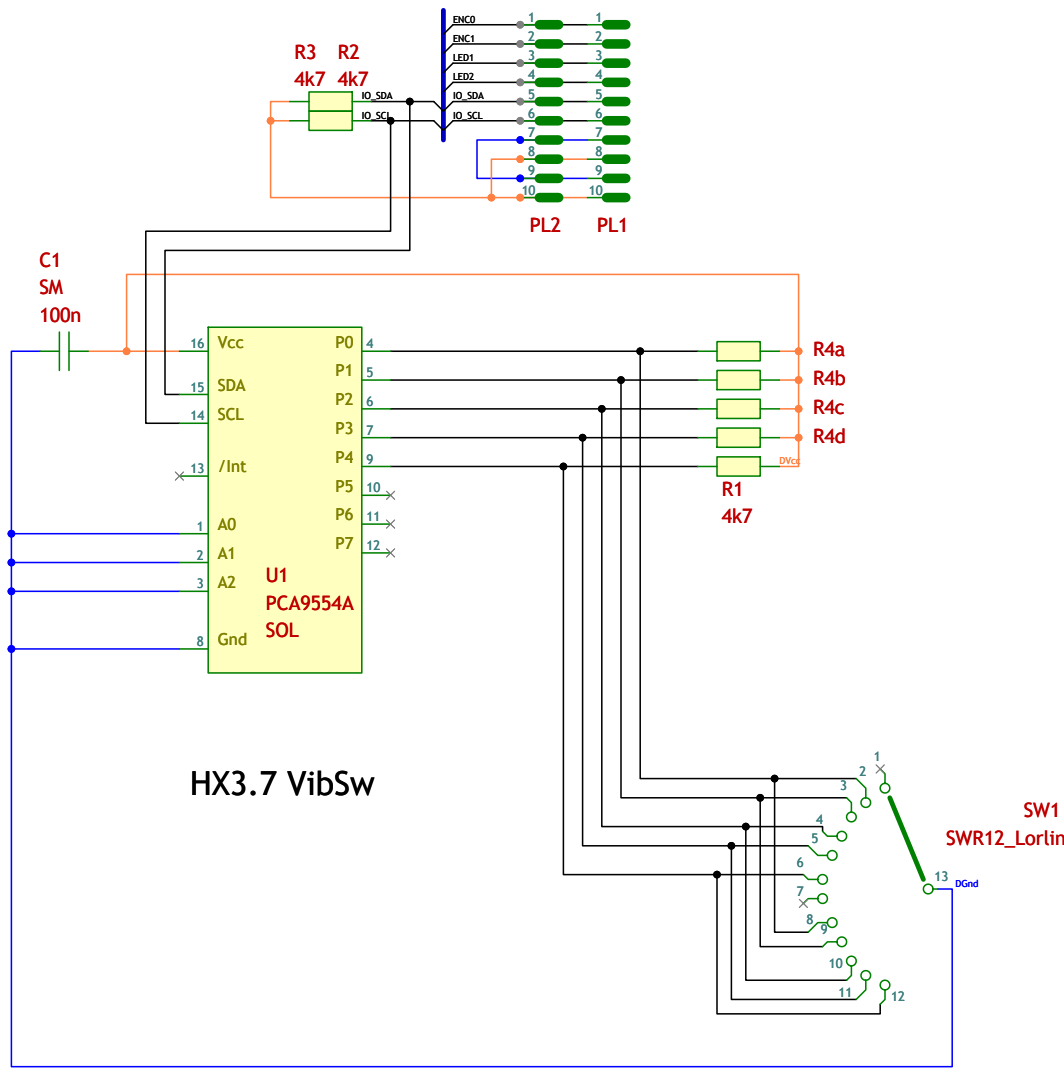
R3
4k7
R2
4k7
ENC0
ENC1
LED1
LED2
IO_SDA
IO_SCL
PL2
PL1
C1
SM
100n
Vcc
SDA
SCL
/Int
A0
A1
A2
Gnd
P0
P1
P2
P3
P4
P5
P6
P7
U1
PCA9554A
SOL
R4a
R4b
R4c
R4d
DVcc
R1
4k7
HX3.7 VibSw
SW1
SWR12_Lorlin
DGnd