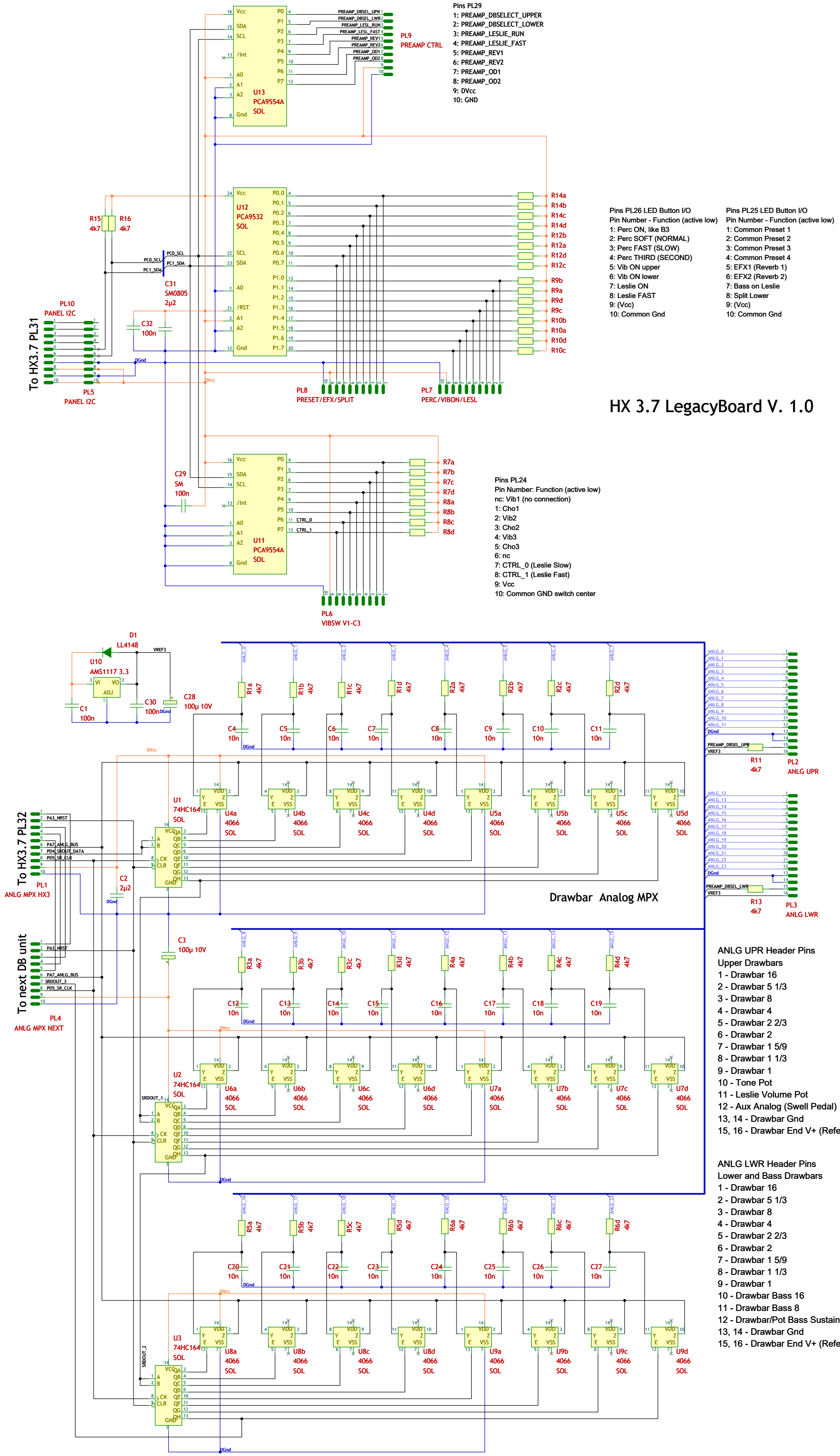
U13
PCA9554A
SOL
PL9
PREAMP CTRL
Pins PL29
1: PREAMP_DBSELECT_UPPER
2: PREAMP_DBSELECT_LOWER
3: PREAMP_LESLIE_RUN
4: PREAMP_LESLIE_FAST
5: PREAMP_REV1
6: PREAMP_REV2
7: PREAMP_OD1
8: PREAMP_OD2
9: DVcc
10: GND
U12
PCA9532
SOL
R15
4k7
R16
4k7
C31
SM0805
2µ2
C32
100n
PL10
PANEL I2C
To HX3.7 PL31
PL5
PANEL I2C
PL8
PRESET/EFX/SPLIT
PL7
PERC/VIBON/LESL
Pins PL26 LED Button I/O
Pin Number - Function (active low)
1: Perc ON, like B3
2: Perc SOFT (NORMAL)
3: Perc FAST (SLOW)
4: Perc THIRD (SECOND)
5: Vib ON upper
6: Vib ON lower
7: Leslie ON
8: Leslie FAST
9: (Vcc)
10: Common Gnd
Pins PL25 LED Button I/O
Pin Number - Function (active low)
1: Common Preset 1
2: Common Preset 2
3: Common Preset 3
4: Common Preset 4
5: EFX1 (Reverb 1)
6: EFX2 (Reverb 2)
7: Bass on Leslie
8: Split Lower
9: (Vcc)
10: Common Gnd
HX 3.7 LegacyBoard V. 1.0
U11
PCA9554A
SOL
C29
SM
100n
PL6
VIBSW V1-C3
Pins PL24
Pin Number: Function (active low)
nc: Vib1 (no connection)
1: Cho1
2: Vib2
3: Cho2
4: Vib3
5: Cho3
6: nc
7: CTRL_0 (Leslie Slow)
8: CTRL_1 (Leslie Fast)
9: Vcc
10: Common GND switch center
D1
LL4148
U10
AMS1117 3.3
C1
100n
C30
100n
C28
100µ 10V
R11
4k7
PL2
ANLG UPR
R13
4k7
PL3
ANLG LWR
To HX3.7 PL32
PL1
ANLG MPX HX3
C2
2µ2
U1
74HC164
SOL
U4a
4066
SOL
U4b
4066
SOL
U4c
4066
SOL
U4d
4066
SOL
U5a
4066
SOL
U5b
4066
SOL
U5c
4066
SOL
U5d
4066
SOL
Drawbar Analog MPX
To next DB unit
PL4
ANLG MPX NEXT
C3
100µ 10V
U2
74HC164
SOL
U6a
4066
SOL
U6b
4066
SOL
U6c
4066
SOL
U6d
4066
SOL
U7a
4066
SOL
U7b
4066
SOL
U7c
4066
SOL
U7d
4066
SOL
ANLG UPR Header Pins
Upper Drawbars
1 - Drawbar 16
2 - Drawbar 5 1/3
3 - Drawbar 8
4 - Drawbar 4
5 - Drawbar 2 2/3
6 - Drawbar 2
7 - Drawbar 1 5/9
8 - Drawbar 1 1/3
9 - Drawbar 1
10 - Tone Pot
11 - Leslie Volume Pot
12 - Aux Analog (Swell Pedal)
13, 14 - Drawbar Gnd
15, 16 - Drawbar End V+ (Reference)
U3
74HC164
SOL
U8a
4066
SOL
U8b
4066
SOL
U8c
4066
SOL
U8d
4066
SOL
U9a
4066
SOL
U9b
4066
SOL
U9c
4066
SOL
U9d
4066
SOL
ANLG LWR Header Pins
Lower and Bass Drawbars
1 - Drawbar 16
2 - Drawbar 5 1/3
3 - Drawbar 8
4 - Drawbar 4
5 - Drawbar 2 2/3
6 - Drawbar 2
7 - Drawbar 1 5/9
8 - Drawbar 1 1/3
9 - Drawbar 1
10 - Drawbar Bass 16
11 - Drawbar Bass 8
12 - Drawbar/Pot Bass Sustain
13, 14 - Drawbar Gnd
15, 16 - Drawbar End V+ (Reference)