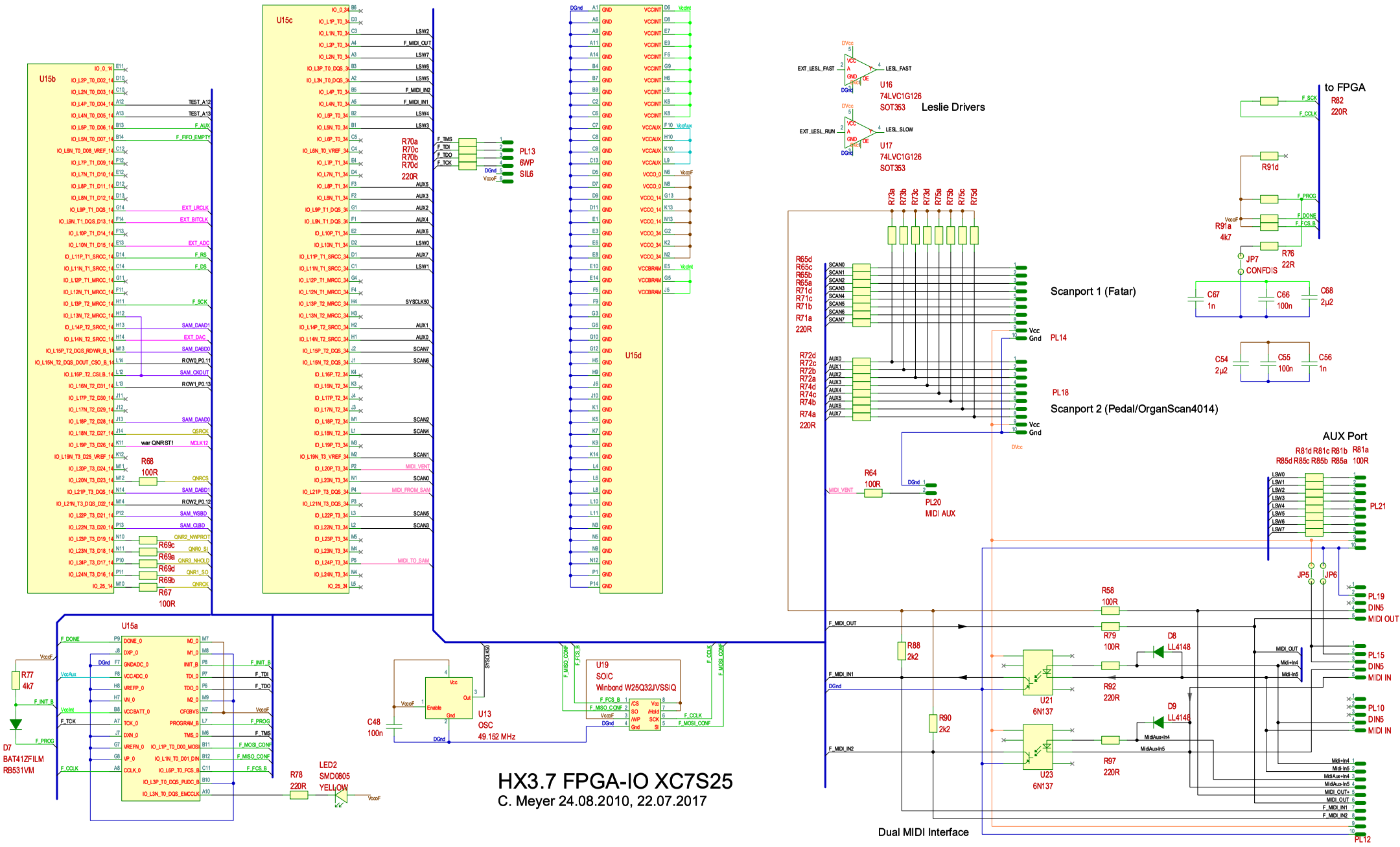
HX3.7 FPGA-IO XC7S25
C. Meyer 24.08.2010, 22.07.2017
U15a
U15b
U15c
U15d
U16
74LVC1G126
SOT353
Leslie Drivers
U17
74LVC1G126
SOT353
to FPGA
R82
220R
R91d
R91a
4k7
R76
22R
JP7
CONFDIS
C67
1n
C66
100n
C68
2µ2
C54
2µ2
C55
100n
C56
1n
Scanport 1 (Fatar)
PL14
PL18
Scanport 2 (Pedal/OrganScan4014)
R65d
R65c
R65b
R65a
R71d
R71c
R71b
R71a
220R
R72d
R72c
R72b
R72a
R74d
R74c
R74b
R74a
220R
R64
100R
PL20
MIDI AUX
AUX Port
R81d R81c R81b R81a
R85d R85c R85b R85a 100R
PL21
JP5
JP6
PL19
DIN5
MIDI OUT
PL15
DIN5
MIDI IN
PL10
DIN5
MIDI IN
PL12
R58
100R
R79
100R
R88
2k2
R90
2k2
D8
LL4148
D9
LL4148
U21
6N137
U23
6N137
R92
220R
R97
220R
Dual MIDI Interface
R70a
R70c
R70b
R70d
220R
PL13
6WP
SIL6
R68
100R
R69c
R69a
R69d
R69b
R67
100R
R77
4k7
D7
BAT41ZFILM
RB531VM
R78
220R
LED2
SMD0805
YELLOW
C48
100n
U13
OSC
49.152 MHz
U19
SOIC
Winbond W25Q32JVSSIQ