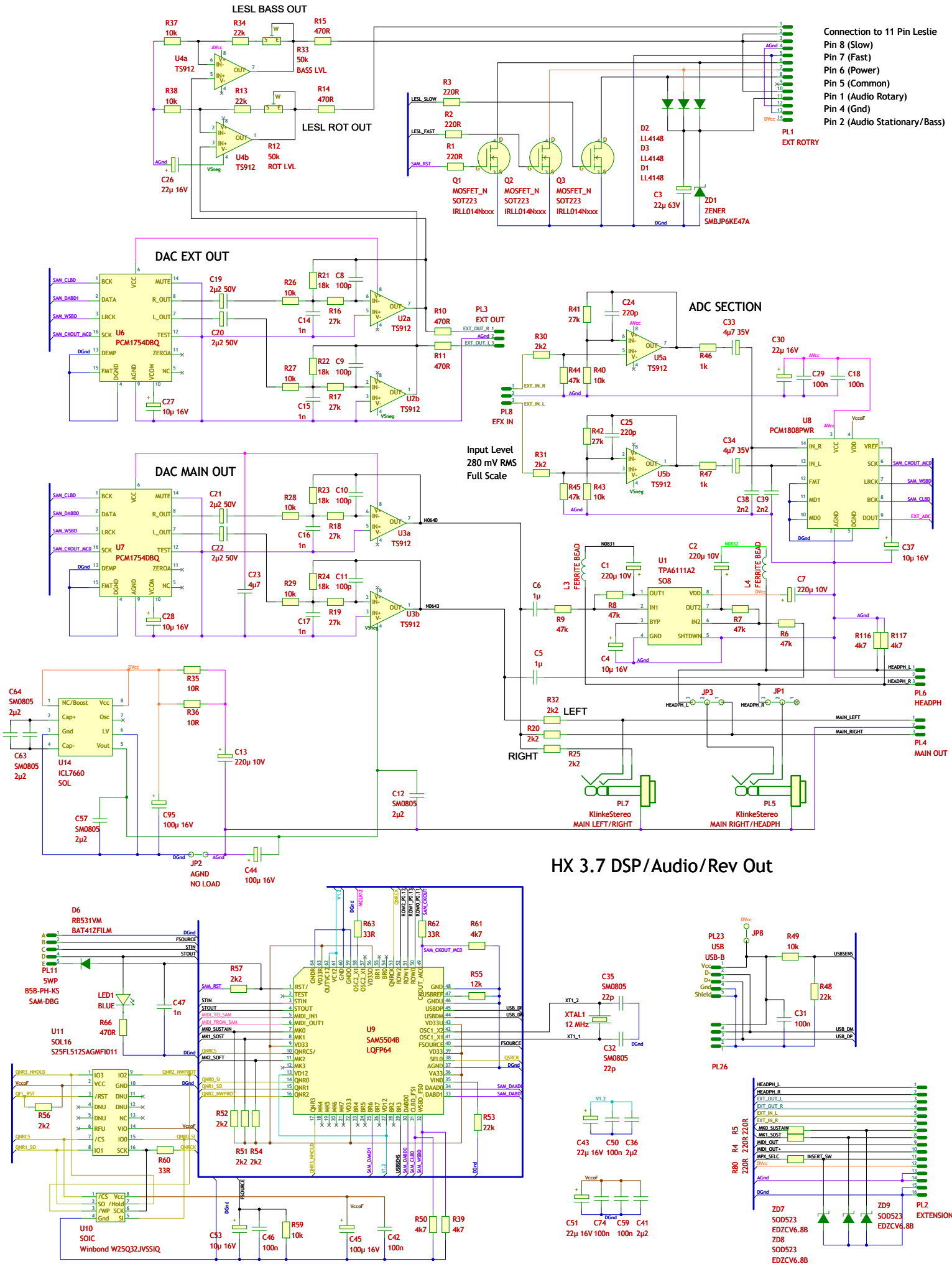
LESL BASS OUT
R37 10k
R34 22k
R15 470R
R33 50k BASS LVL
U4a TS912
R38 10k
R13 22k
R14 470R
LESL ROT OUT
U4b TS912
R12 50k ROT LVL
C26 22µ 16V
R3 220R
R2 220R
R1 220R
LESL_SLOW
LESL_FAST
SAM_RST
Q1 MOSFET_N SOT223 IRLL014Nxxx
Q2 MOSFET_N SOT223 IRLL014Nxxx
Q3 MOSFET_N SOT223 IRLL014Nxxx
D2 LL4148
D3 LL4148
D1 LL4148
C3 22µ 63V
ZD1 ZENER SMBJP6KE47A
Connection to 11 Pin Leslie
Pin 8 (Slow)
Pin 7 (Fast)
Pin 6 (Power)
Pin 5 (Common)
Pin 1 (Audio Rotary)
Pin 4 (Gnd)
Pin 2 (Audio Stationary/Bass)
PL1 EXT ROTRY
DAC EXT OUT
U6 PCM1754DBQ
C19 2µ2 50V
C20 2µ2 50V
R26 10k
R27 10k
R21 18k
R22 18k
C8 100p
C9 100p
C14 1n
C15 1n
R16 27k
R17 27k
U2a TS912
U2b TS912
C27 10µ 16V
R10 470R
R11 470R
PL3 EXT OUT
ADC SECTION
R41 27k
R42 27k
C24 220p
C25 220p
R30 2k2
R31 2k2
R44 47k
R40 10k
R45 47k
R43 10k
U5a TS912
U5b TS912
R46 1k
R47 1k
C33 4µ7 35V
C34 4µ7 35V
C30 22µ 16V
C29 100n
C18 100n
PL8 EFX IN
Input Level
280 mV RMS
Full Scale
U8 PCM1808PWR
C38 2n2
C39 2n2
C37 10µ 16V
DAC MAIN OUT
U7 PCM1754DBQ
C21 2µ2 50V
C22 2µ2 50V
C23 4µ7
R28 10k
R29 10k
R23 18k
R24 18k
C10 100p
C11 100p
C16 1n
C17 1n
R18 27k
R19 27k
U3a TS912
U3b TS912
C28 10µ 16V
C1 220µ 10V
C2 220µ 10V
U1 TPA6111A2 SO8
L3 FERRITE BEAD
L4 FERRITE BEAD
C6 1µ
C5 1µ
R9 47k
R8 47k
R7 47k
R6 47k
C4 10µ 16V
C7 220µ 10V
R116 4k7
R117 4k7
PL6 HEADPH
JP3
JP1
R32 2k2
R20 2k2
R25 2k2
LEFT
RIGHT
PL4 MAIN OUT
PL7 KlinkeStereo MAIN LEFT/RIGHT
PL5 KlinkeStereo MAIN RIGHT/HEADPH
C64 SM0805 2µ2
C63 SM0805 2µ2
U14 ICL7660 SOL
R35 10R
R36 10R
C13 220µ 10V
C95 100µ 16V
C57 SM0805 2µ2
C12 SM0805 2µ2
JP2 AGND NO LOAD
C44 100µ 16V
HX 3.7 DSP/Audio/Rev Out
D6 RB531VM BAT41ZFILM
PL11 5WP B5B-PH-KS SAM-DBG
LED1 BLUE
R66 470R
C47 1n
U11 SOL16 S25FL512SAGMFI011
R56 2k2
R60 33R
U10 SOIC Winbond W25Q32JVSSIQ
R57 2k2
R63 33R
R62 33R
R61 4k7
R55 12k
R52 2k2
R51 2k2
R54 2k2
R53 22k
U9 SAM5504B LQFP64
C35 SM0805 22p
XTAL1 12 MHz
C32 SM0805 22p
PL23 USB USB-B
JP8
R49 10k
R48 22k
C31 100n
PL26
C43 22µ 16V
C50 100n
C36 2µ2
C51 22µ 16V
C74 100n
C59 100n
C41 2µ2
R50 4k7
R39 4k7
C53 10µ 16V
C46 100n
R59 10k
C45 100µ 16V
C42 100n
R5 220R
R4 220R
R80 220R
ZD7 SOD523 EDZCV6.8B
ZD8 SOD523 EDZCV6.8B
ZD9 SOD523 EDZCV6.8B
PL2 EXTENSION