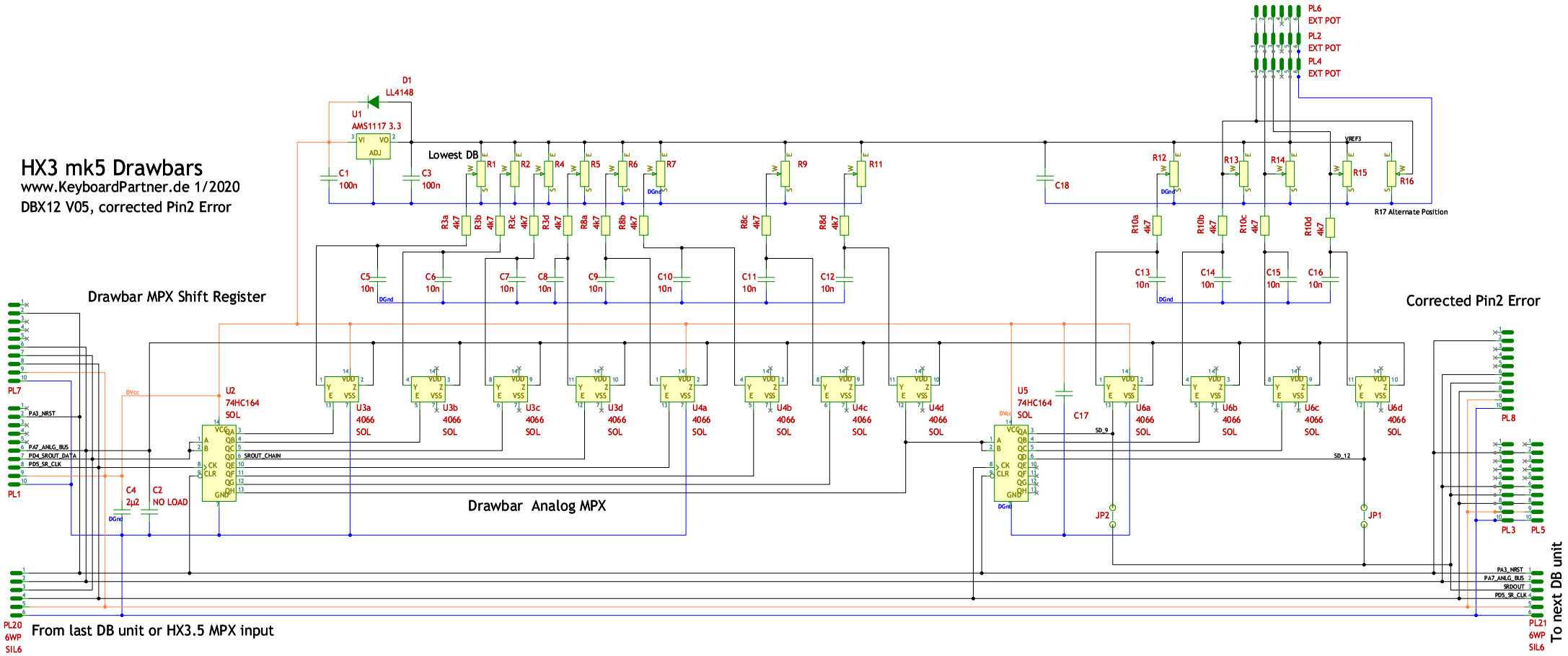
HX3 mk5 Drawbars
www.KeyboardPartner.de 1/2020
DBX12 V05, corrected Pin2 Error
Drawbar MPX Shift Register
Drawbar Analog MPX
Corrected Pin2 Error
Lowest DB
From last DB unit or HX3.5 MPX input
To next DB unit
PL6
EXT POT
PL2
EXT POT
PL4
EXT POT
D1
LL4148
U1
AMS1117 3.3
C1
100n
C3
100n
C18
VREF3
R17 Alternate Position
U2
74HC164
SOL
U5
74HC164
SOL
C4
2µ2
C2
NO LOAD
C17
JP1
JP2
PL7
PL1
PL8
PL3
PL5
PL20
6WP
SIL6
PL21
6WP
SIL6
PA3_NRST
PA7_ANLG_BUS
PD4_SROUT_DATA
PD5_SR_CLK
SROUT_CHAIN
SD_9
SD_12
SRDOUT