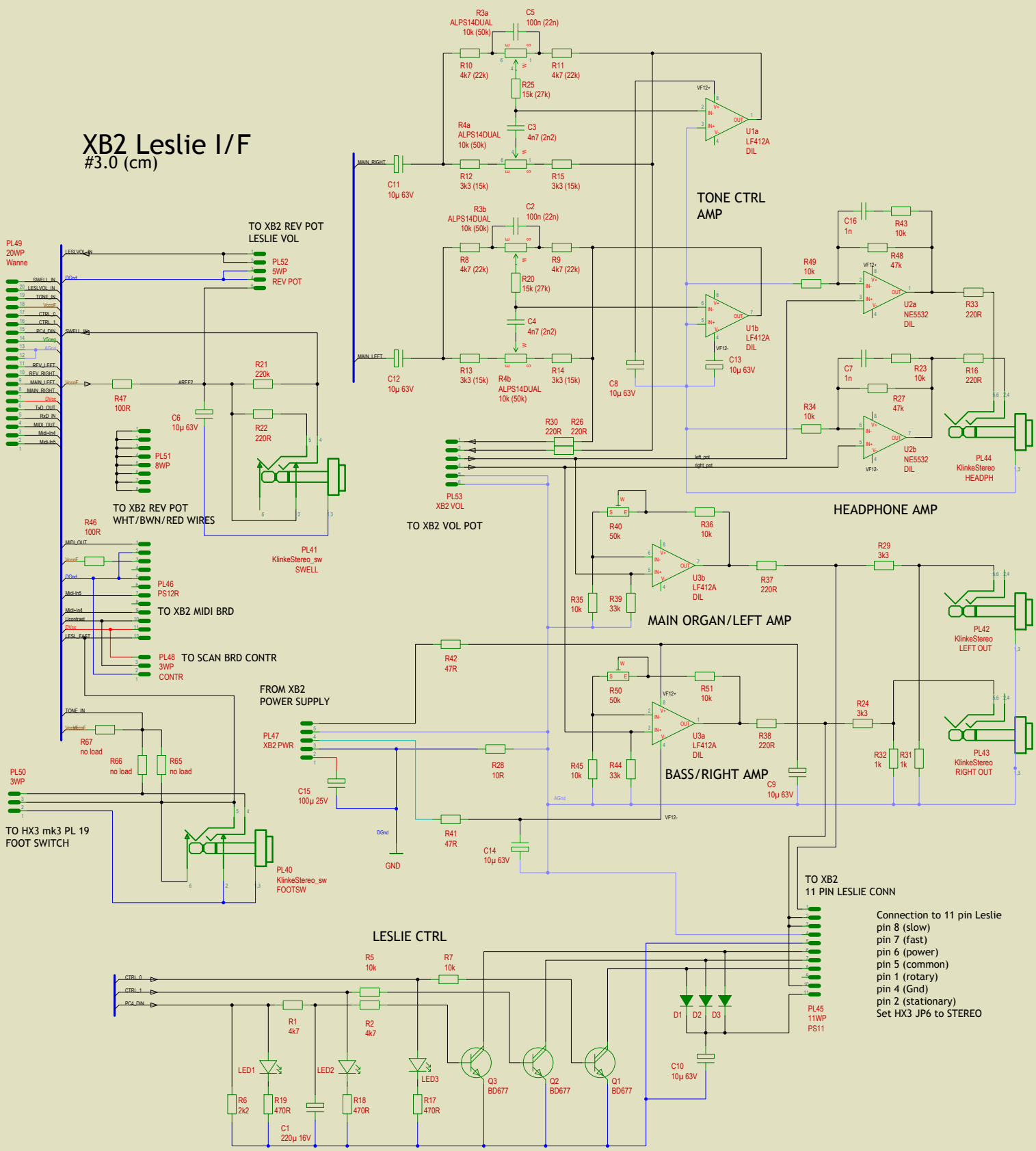
XB2 Leslie I/F
#3.0 (cm)
TONE CTRL AMP
HEADPHONE AMP
MAIN ORGAN/LEFT AMP
BASS/RIGHT AMP
LESLIE CTRL
TO XB2 REV POT LESLIE VOL
TO XB2 REV POT WHT/BWN/RED WIRES
TO XB2 VOL POT
TO XB2 MIDI BRD
TO SCAN BRD CONTR
FROM XB2 POWER SUPPLY
TO HX3 mk3 PL 19 FOOT SWITCH
TO XB2 11 PIN LESLIE CONN
Connection to 11 pin Leslie
pin 8 (slow)
pin 7 (fast)
pin 6 (power)
pin 5 (common)
pin 1 (rotary)
pin 4 (Gnd)
pin 2 (stationary)
Set HX3 JP6 to STEREO
PL49 20WP Wanne
PL52 5WP REV POT
PL51 8WP
PL41 KlinkeStereo_sw SWELL
PL46 PS12R
PL48 3WP CONTR
PL50 3WP
PL40 KlinkeStereo_sw FOOTSW
PL47 XB2 PWR
PL53 XB2 VOL
PL44 KlinkeStereo HEADPH
PL42 KlinkeStereo LEFT OUT
PL43 KlinkeStereo RIGHT OUT
PL45 11WP PS11
U1a LF412A DIL
U1b LF412A DIL
U2a NE5532 DIL
U2b NE5532 DIL
U3a LF412A DIL
U3b LF412A DIL
Q1 BD677
Q2 BD677
Q3 BD677
GND