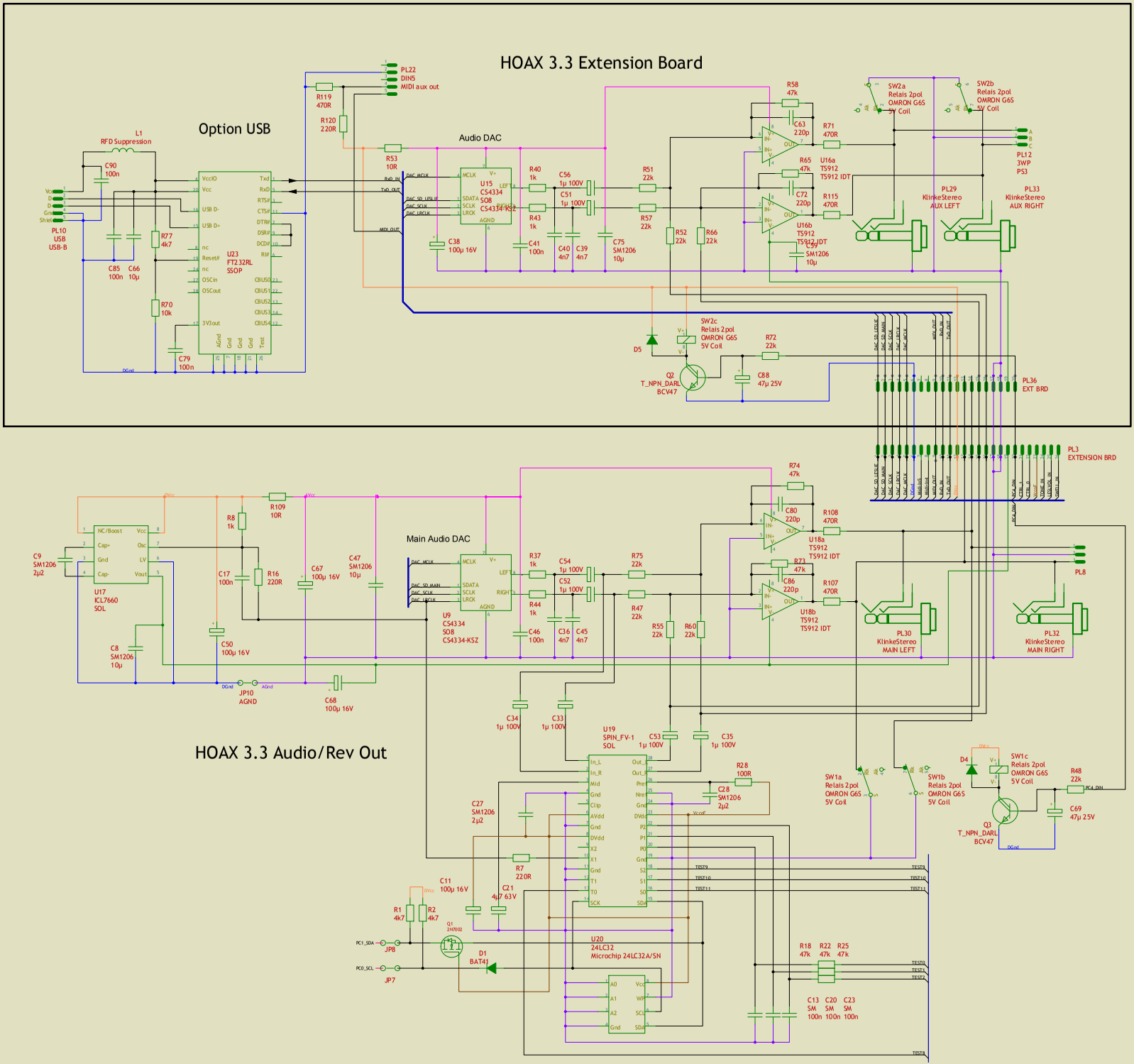
HOAX 3.3 Extension Board
Option USB
Audio DAC
PL22
DIN5
MIDI aux out
R119
470R
R120
220R
L1
RFD Suppression
C90
100n
PL10
USB
USB-B
R77
4k7
R70
10k
C85
100n
C66
10µ
C79
100n
U23
FT232RL
SSOP
R53
10R
U15
CS4334
SO8
CS4334-KSZ
C38
100µ 16V
R40
1k
R43
1k
C41
100n
C56
1µ 100V
C51
1µ 100V
C40
4n7
C39
4n7
C75
SM1206
10µ
R51
22k
R57
22k
R52
22k
R66
22k
R58
47k
C63
220p
R71
470R
R65
47k
U16a
TS912
TS912 IDT
C72
220p
R115
470R
U16b
TS912
TS912 IDT
C79
SM1206
10µ
SW2a
Relais 2pol
OMRON G6S
5V Coil
SW2b
Relais 2pol
OMRON G6S
5V Coil
PL12
3WP
PS3
PL29
KlinkeStereo
AUX LEFT
PL33
KlinkeStereo
AUX RIGHT
D5
SW2c
Relais 2pol
OMRON G6S
5V Coil
Q2
T_NPN_DARL
BCV47
R72
22k
C88
47µ 25V
PL36
EXT BRD
PL3
EXTENSION BRD
HOAX 3.3 Audio/Rev Out
U17
ICL7660
SOL
C9
SM1206
2µ2
C8
SM1206
10µ
R8
1k
R16
220R
C17
100n
C50
100µ 16V
JP10
AGND
C68
100µ 16V
R109
10R
C67
100µ 16V
C47
SM1206
10µ
Main Audio DAC
U9
CS4334
SO8
CS4334-KSZ
R37
1k
R44
1k
C46
100n
C54
1µ 100V
C52
1µ 100V
C36
4n7
C45
4n7
R75
22k
R47
22k
R55
22k
R60
22k
R74
47k
C80
220p
R108
470R
U18a
TS912
TS912 IDT
R73
47k
C86
220p
R107
470R
U18b
TS912
TS912 IDT
PL8
PL30
KlinkeStereo
MAIN LEFT
PL32
KlinkeStereo
MAIN RIGHT
C34
1µ 100V
C33
1µ 100V
U19
SPIN_FV-1
SOL
C53
1µ 100V
C35
1µ 100V
R28
100R
C28
SM1206
2µ2
C27
SM1206
2µ2
R7
220R
C11
100µ 16V
C21
4µ7 63V
R1
4k7
R2
4k7
Q1
2N7002
JP8
JP7
D1
BAT41
U20
24LC32
Microchip 24LC32A/SN
SW1a
Relais 2pol
OMRON G6S
5V Coil
SW1b
Relais 2pol
OMRON G6S
5V Coil
SW1c
Relais 2pol
OMRON G6S
5V Coil
D4
Q3
T_NPN_DARL
BCV47
R48
22k
C69
47µ 25V
R18
47k
R22
47k
R25
47k
C13
SM
100n
C20
SM
100n
C23
SM
100n