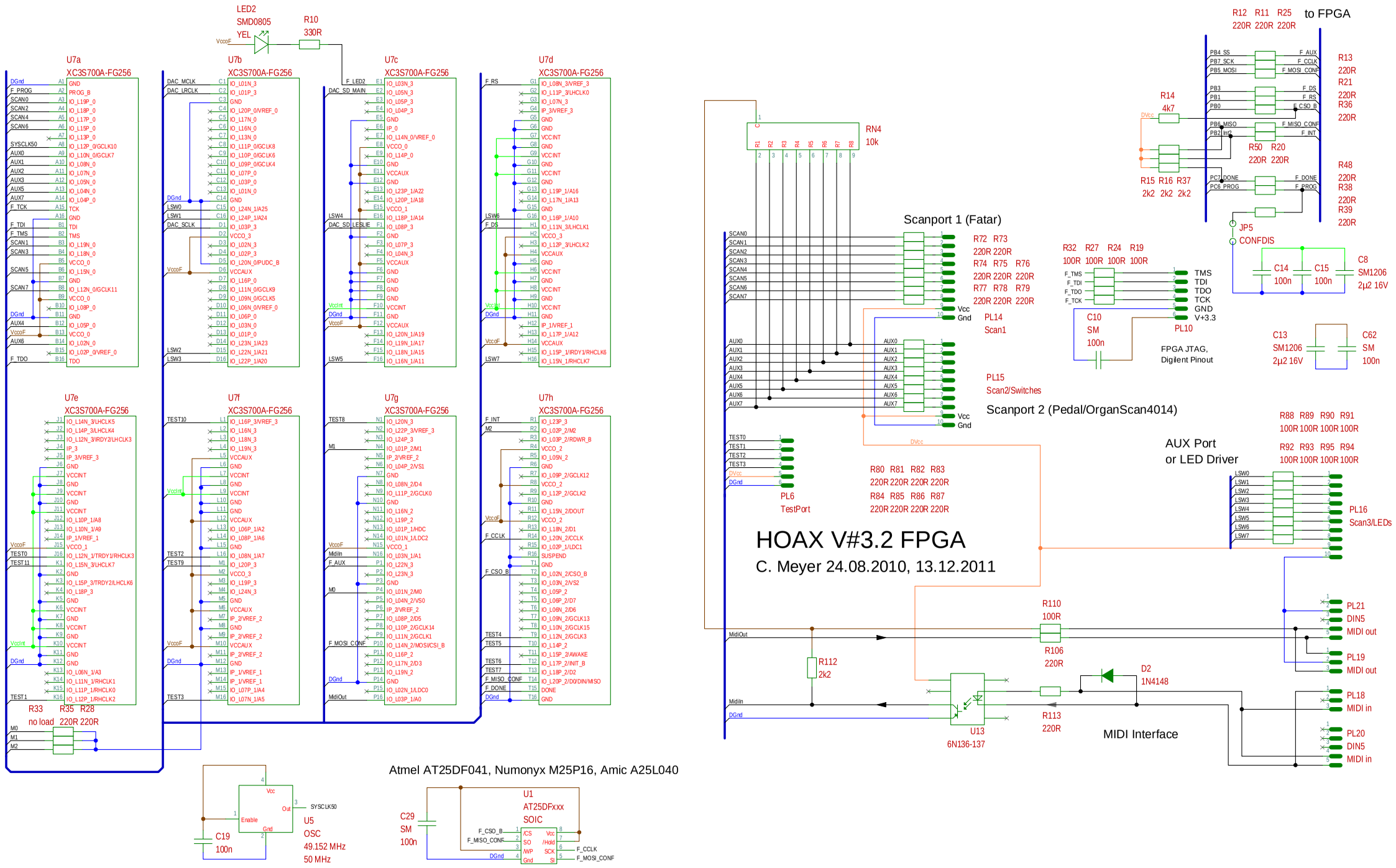
HOAX V#3.2 FPGA
C. Meyer 24.08.2010, 13.12.2011
U7a XC3S700A-FG256
U7b XC3S700A-FG256
U7c XC3S700A-FG256
U7d XC3S700A-FG256
U7e XC3S700A-FG256
U7f XC3S700A-FG256
U7g XC3S700A-FG256
U7h XC3S700A-FG256
LED2 SMD0805 YEL
R10 330R
R12 R11 R25 220R 220R 220R
to FPGA
R13 220R
R21 220R
R36 220R
R14 4k7
R15 R16 R37 2k2 2k2 2k2
R50 R20 220R 220R
R48 220R
R38 220R
R39 220R
JP5 CONFDIS
C14 100n
C15 100n
C8 SM1206 2µ2 16V
RN4 10k
Scanport 1 (Fatar)
R72 R73 220R 220R
R74 R75 R76 220R 220R 220R
R77 R78 R79 220R 220R 220R
PL14 Scan1
R32 R27 R24 R19 100R 100R 100R 100R
TMS TDI TDO TCK GND V+3.3
PL10
FPGA JTAG, Digilent Pinout
C10 SM 100n
C13 SM1206 2µ2 16V
C62 SM 100n
PL15 Scan2/Switches
Scanport 2 (Pedal/OrganScan4014)
PL6 TestPort
R80 R81 R82 R83 220R 220R 220R 220R
R84 R85 R86 R87 220R 220R 220R 220R
AUX Port or LED Driver
R88 R89 R90 R91 100R 100R 100R 100R
R92 R93 R95 R94 100R 100R 100R 100R
PL16 Scan3/LEDs
R110 100R
R106 220R
R112 2k2
D2 1N4148
R113 220R
U13 6N136-137
MIDI Interface
PL21 DIN5 MIDI out
PL19 MIDI out
PL18 MIDI in
PL20 DIN5 MIDI in
R33 R35 R28 no load 220R 220R
Atmel AT25DF041, Numonyx M25P16, Amic A25L040
U5 OSC 49.152 MHz 50 MHz
C19 100n
U1 AT25DFxxx SOIC
C29 SM 100n