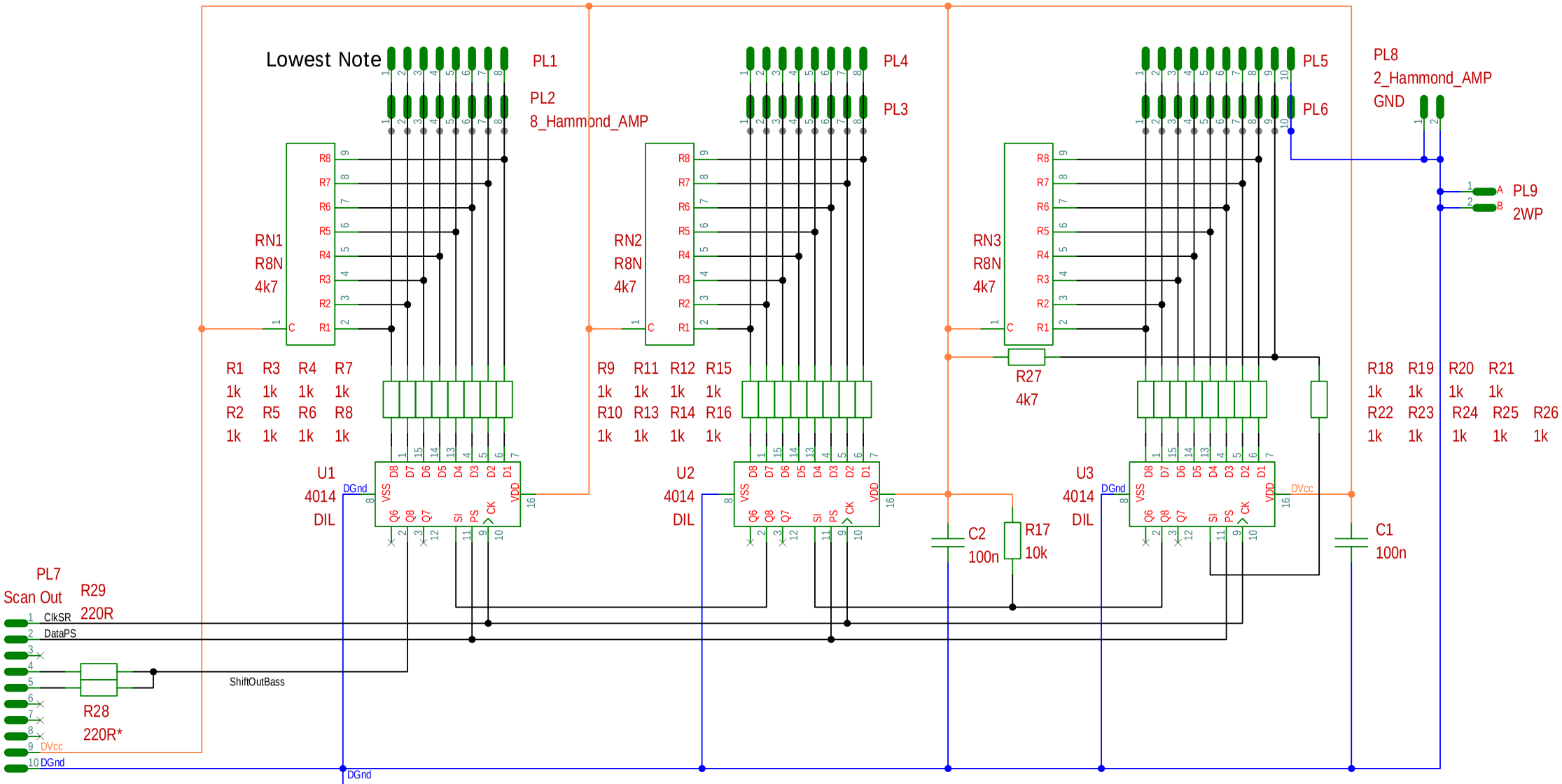

use either
R29 for OrganScan61 daisy chain
or
R28 for FatarScan2, Scan-16, Scan-INLINE

HOAX BASS 25

#1.3b (cm)

from #1.2: changed connection of R28, R29
for OrganScan61 compatibility

omit U3/RN3 and R18 to R26
for 13-note pedal