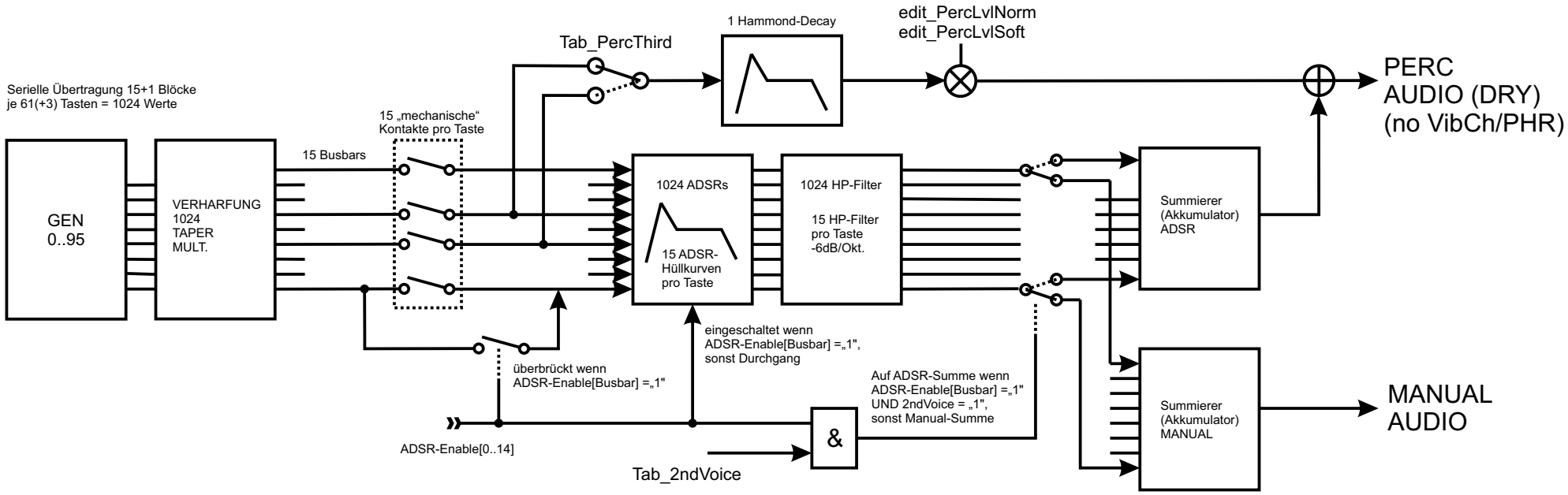HX3.5 Keying & Percussion/ADSR Routing